Dual Mode Digital Timer Relay (On Delay / Power-On Timing) DRV-10-V2 ENG

General

DRV-10-V2 is a dual mode digital timer relay with selectable On Delay and Power-On Timing functions. The two modes are mutually exclusive and can be selected via the front panel. It is designed for precise and flexible timing control in industrial automation systems.

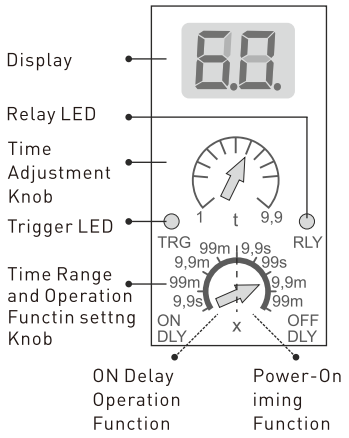

Usage and Working Principle of the Device

Function Modes

On Delay Mode: When power is applied or trigger signal is received, the device starts timing.After the preset delay time, the relay output is activated.

Power-On Timing Mode: When power is applied, the relay output is activated immediately.After the preset delay time, the relay output is deactivated.

Note: Only one mode can be selected at a time.

Time Setting

1.Time Range Selection (X Knob)

Select the desired time range using the range selector:

-0.0 – 9.9 sec -0.0 – 9.9 min

-0 – 99 sec -0 – 99 min4.2

2.Time Adjustment (t Knob)

Adjust the delay value within the selected range using the time setting knob.

Trigger Input (TR)

- The device starts timing when a trigger signal is applied to the **TR input**.
- In **On Delay mode**, the relay activates after the preset delay time.
- In **Power-On Timing mode**, the relay activates immediately and turns off after the delay time.
- To restart timing, a new trigger signal must be applied.

LED Indicators

- TRG (Trigger LED): Indicates trigger signal is active
- RLY (Relay LED): Indicates relay output status

Relay Contact Status

1.Energized:
- (2)COM–(3)NO: Closed
- (2)COM–(1)NC: Open

2.De-energized:
- (2)COM–(1)NC: Closed
- (2)COM–(3)NO: Open

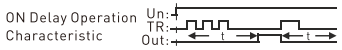

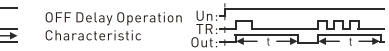

Connection Diagram

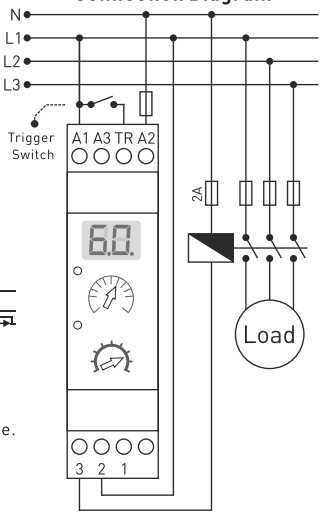

Maintenance

- Disconnect the device from the power supply before maintenance.
- Clean the device using a dry, soft cloth.
- Do not use conductive or chemical cleaning agents, as they may damage the device.
- Ensure proper operation after cleaning.

Warnings

- Operate the device in accordance with this manual.
- Do not use the device in humid or wet environments.
- Install a suitable switch and circuit breaker in the system.
- Ensure the switch and circuit breaker are easily accessible to the operator.
- Clearly mark the switch and circuit breaker as the disconnecting devices.

Tecnical Specifications:

Operating Voltage (A1-A2)	:	110V or 220V AC 50/60Hz.
Operating Voltage (A2-A3)	:	24V AC/DC
Trigger Voltage (TR)	:	24V-240V
Operating Power	:	<6VA
Operating Temperature	:	-20°C...+55°C
Working Time Range (t)	:	0,1sec.-99 min.
Display	:	2-digit display,2 indicator LEDs
Connection Type	:	DIN rail
Weight	:	220g
Contact	:	5A 250V AC Resistive Load
Operating Altitude	:	<2000m
Cable Diameter	:	2,5mm²

Dimensions

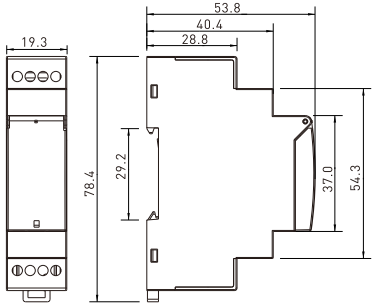

CE Document Number: DRV-10-V2

Dual Mode Digital Timer Relay (On Delay / Power-On Timing) DRV-10-V2 ENG

General

DRV-10-V2 is a dual mode digital timer relay with selectable On Delay and Power-On Timing functions. The two modes are mutually exclusive and can be selected via the front panel. It is designed for precise and flexible timing control in industrial automation systems.

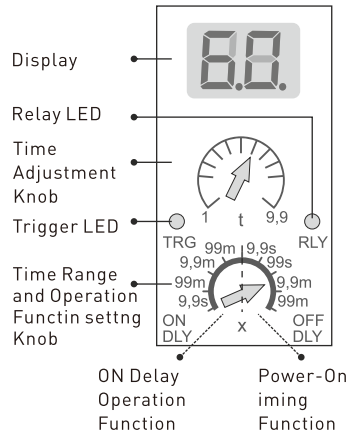

Usage and Working Principle of the Device

Function Modes

On Delay Mode: When power is applied or trigger signal is received, the device starts timing.After the preset delay time, the relay output is activated.

Power-On Timing Mode: When power is applied, the relay output is activated immediately.After the preset delay time, the relay output is deactivated.

Note: Only one mode can be selected at a time.

Time Setting

1.Time Range Selection (X Knob)

Select the desired time range using the range selector:

-0.0 – 9.9 sec -0.0 – 9.9 min

-0 – 99 sec -0 – 99 min4.2

2.Time Adjustment (t Knob)

Adjust the delay value within the selected range using the time setting knob.

Trigger Input (TR)

- The device starts timing when a trigger signal is applied to the **TR input**.
- In **On Delay mode**, the relay activates after the preset delay time.
- In **Power-On Timing mode**, the relay activates immediately and turns off after the delay time.
- To restart timing, a new trigger signal must be applied.

LED Indicators

- TRG (Trigger LED): Indicates trigger signal is active
- RLY (Relay LED): Indicates relay output status

Relay Contact Status

1.Energized:
- (2)COM–(3)NO: Closed
- (2)COM–(1)NC: Open

2.De-energized:
- (2)COM–(1)NC: Closed
- (2)COM–(3)NO: Open



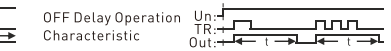

Connection Diagram

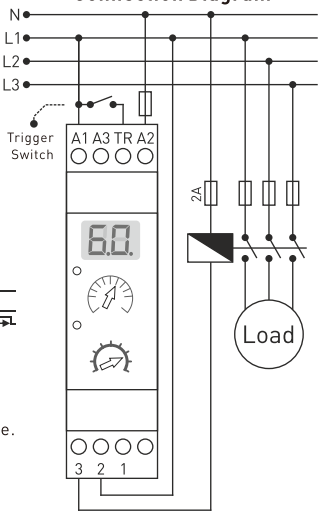

Maintenance

- Disconnect the device from the power supply before maintenance.
- Clean the device using a dry, soft cloth.
- Do not use conductive or chemical cleaning agents, as they may damage the device.
- Ensure proper operation after cleaning.

Warnings

- Operate the device in accordance with this manual.
- Do not use the device in humid or wet environments.
- Install a suitable switch and circuit breaker in the system.
- Ensure the switch and circuit breaker are easily accessible to the operator.
- Clearly mark the switch and circuit breaker as the disconnecting devices.

Tecnical Specifications:

Operating Voltage (A1-A2)	:	110V or 220V AC 50/60Hz.
Operating Voltage (A2-A3)	:	24V AC/DC
Trigger Voltage (TR)	:	24V-240V
Operating Power	:	<6VA
Operating Temperature	:	-20°C...+55°C
Working Time Range (t)	:	0,1sec.-99 min.
Display	:	2-digit display,2 indicator LEDs
Connection Type	:	DIN rail
Weight	:	220g
Contact	:	5A 250V AC Resistive Load
Operating Altitude	:	<2000m
Cable Diameter	:	2,5mm²

Dimensions

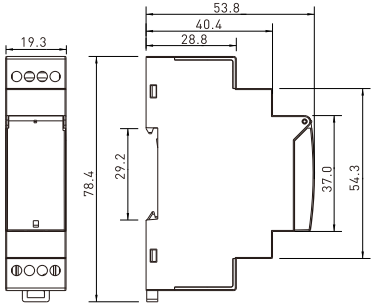

CE Document Number: DRV-10-V2